Be sure. testo

Double thermocouple type J with B-Head

Order nr.: 805311 1111

Our duplex immersion probe thermoelment type J with B-head can be used in a temperature range up to +750 °C. It has two thermocouples built in. This allows you, for example, to operate two different evaluation units or to increase reliability in safety-relevant processes. In complicated installation situations, you can simply switch to the second thermocouple instead of removing the probe. The probes are installed in direct contact with the medium or using immersion sleeves. We offer brass or stainless steel immersion sleeves as well as mounting flanges and compression fittings made of different materials as accessories. Configure the probe according to your requirements and send us the order code.

Customizable options
C -Mounting length

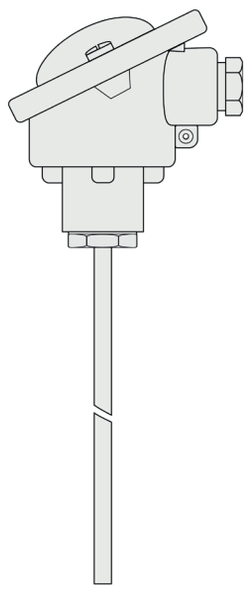

General Information	
Measuring range	-40 °C to +750 °C
Perm. (°C) conn. head	-40 °C to +100 °C
Accuracy	-40 °C to +375 °C: ±1,5 °C | 375 °C to 750 °C: ±0,004 |t| according to DIN IEC 60584 Class 1
Response time	t63 / t99: information is available on request
Supply and output	
Measuring element	2 x Thermocouple Type J
Measuring point	Measuring point isolated
Measurement signal	Thermovoltage
Ambient conditions	
Protection class	IP65 according DIN 60529
Humidity and moisture condensation resistance	according to application-specific qualification
Certificates and Standards	
Standards	DIN EN 61326-1:2013 | DIN EN IEC 63000:2019-05
Directive	RoHS 2011/65/EU | 2014/30/EU
Certificates	Certificate of suitability (on request)

Connection head	
Design	Form B
Material	Aluminium
Color	RAL 9006 aluminium silver
W/H/Ø (mm)	76/82/70
Cable gland head	with strain relief
Clamping range (mm)	4,8 to 13
Ambient temperature max	+100 °C
Sensor unit	Fixed

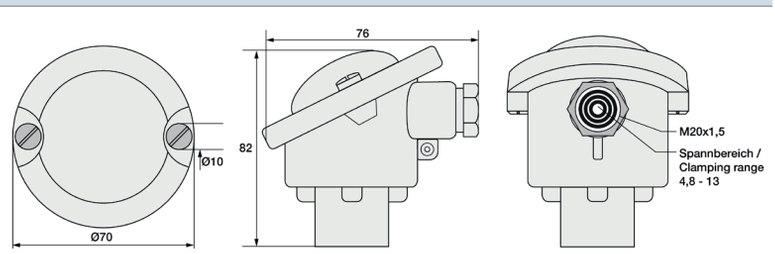

Protection sleeve		C - Mounting length			
Material	Stainless steel 1.4571 | 316TI	**Code**	**Length (mm)**	**Code**	**Length (mm)**
		C0050	50[1]	C0250	250[1]
Ø (mm)	6[2]	C0100	100[1]	C0300	300[1]
		C0150	150[1]	C0400	400[1]
		C0200	200[1]	C0500	500[1]

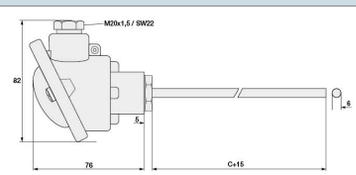

Other mounting lengths on request | [1]Tolerance ± 1% | Please note: Mounting length = C + 15 mm | [2] Tolerance ± 0,1 mm

RL / KS / 27.10.2021

Your order code	
Order nr.	Mounting length
805311 1111	C_____

Delivery and Assembly	
Assembly instructions	by means of existing protection sleeve, mounting flange, thermowell or compression fitting.
Delivery and Packaging	Probe, seperatly packaged in PE bag

Important assembly advices

Measuring errors can occur due to heat dissipation to the environment. To keep these as small as possible, we recommend immersing the thermowell of your temperature sensor as deeply as possible into the medium to be measured during installation. The optimum installation depth should be 10-15 times the Ø of the thermowell or, when using a thermowell, the Ø of the thermowell. When installing in pipelines whose Ø does not have a sufficiently deep installation depth, you should install the probe either at an angle or in a pipe elbow. Make sure that there is sufficient space for the sensor to be removed. 1) Installation with sufficient installation depth 2) Installation at an angle with small pipe Ø 3) Not like this: Minimum installation depth not reached

Installation by means of compression fitting: Please tighten the union nut of the compression fitting by hand as far as it will go (clearly noticeable). For compression fittings with PTFE pressure ring, please make a 1/4 turn with a wrench suitable for the width across flats. These compression fittings can be used several times in this way. In the case of compression fittings with stainless steel cutting ring, the compression fitting connects to the protection tube. This connection is pressure resistant up to 40 bar. However, the compression fitting can only be used once. It must also be tightened more firmly. Please tighten it with 1 3/4 turns.

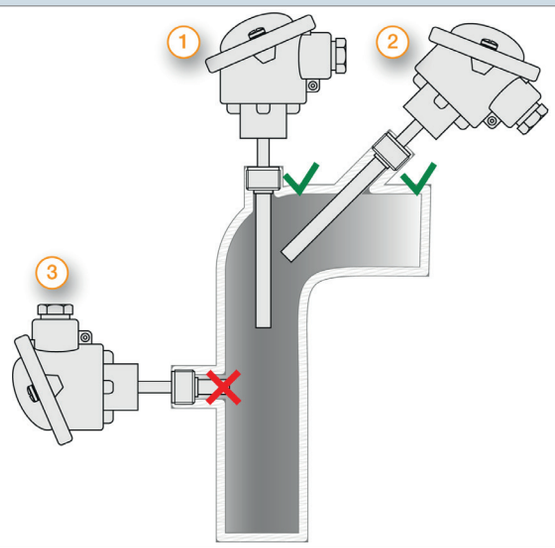

Mounting by means of mounting flange: Please make sure that the Ø of the mounting flange matches the Ø of the protective sleeve. For B-head fittings or very long protection sleeves, we recommend a stainless steel or aluminum mounting flange due to its stability.

Mounting by means of immersion sleeve (4): Please note that the Ø and the length of the immersion sleeve must be selected to match the installation situation so that the minimum immersion depth can be achieved. Since the sensor is not inserted directly into the medium, but via the immersion sleeve, the response times are somewhat slower. The sensor should be selected so that the thermowell touches the bottom of the immersion sleeve and the air cushion around the thermowell is as small as possible. The use of thermal paste can improve the response times.

Please lay the cable with reserve loop (5) and in such a way that no water can penetrate the sensor head. This allows you to extend the sensor without disconnecting the electrical connection.

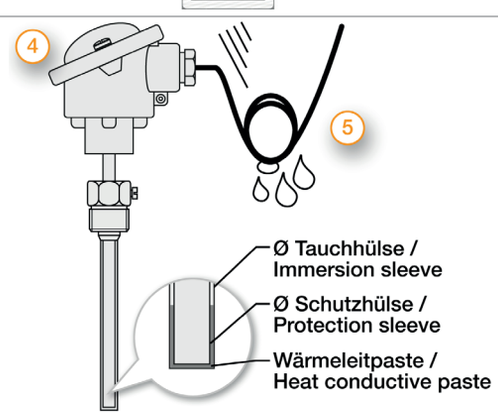

Technical drawing

Customizable options: C -Mounting length | All dimensions in mm

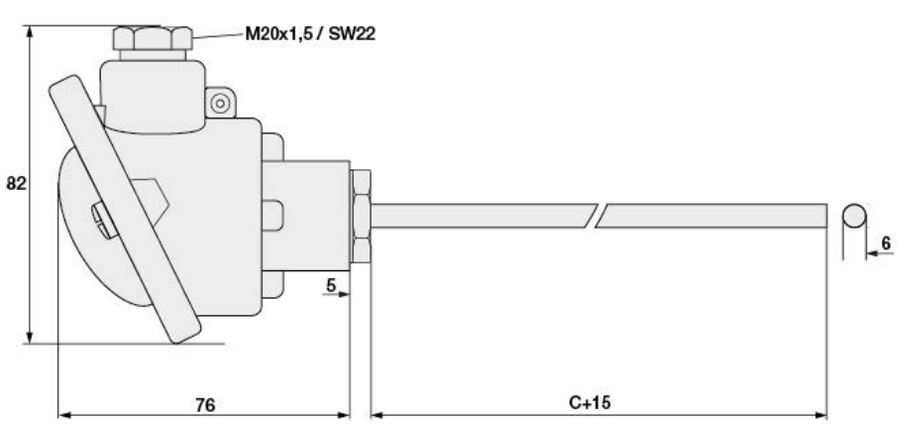

RL / KS / 27.10.2021

Matching accessories: Mounting flange

Steel flange

Article no.	**809500 1XXX**
Material	Stainless Steel
Fixing	3 x Ø 4,5 mm drill holes
Now please select the size of the hole and append the last digits to your order number.	
A - Hole (mm)	**Code**
6	060
9	090
10	100
15	150
Your order code 809500 1_ _ _	

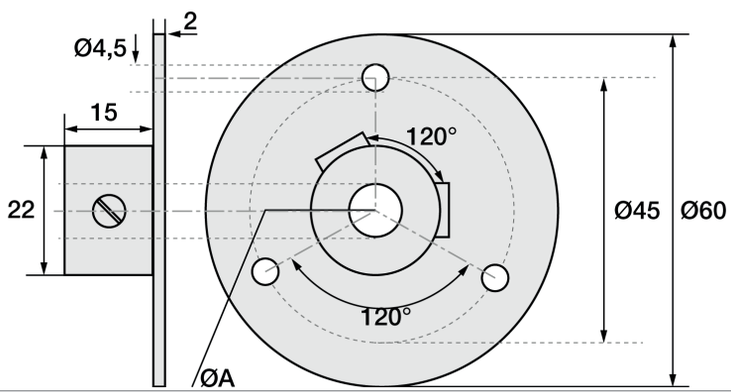

Aluminium flange

Article no.	**809500 2XXX**
Material	Aluminium
Fixing	2 x Ø 4,5 mm drill holes
Now please select the size of the hole and append the last digits to your order number.	
A - Hole (mm)	**Code**
6	060
11	110
Your order code 809500 2_ _ _	

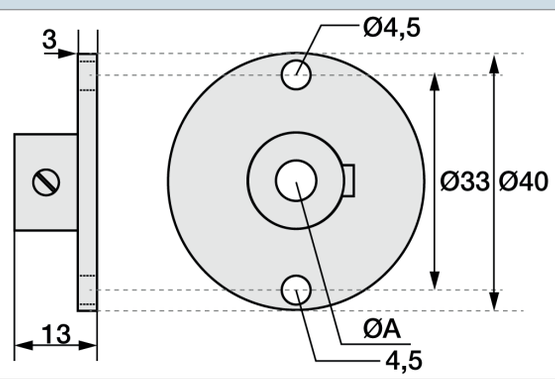

Plastic flange

Article no.	**809500 4XXX**
Material	Plastic
Fixing	2 x Ø 4,5 mm drill holes
Now please select the size of the hole and append the last digits to your order number.	
A - Hole (mm)	**Code**
6	060
12	120
Your order code 809500 4_ _ _	

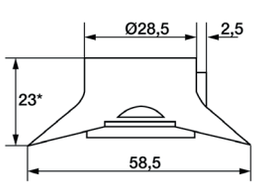

*eingebaut / mounted 20

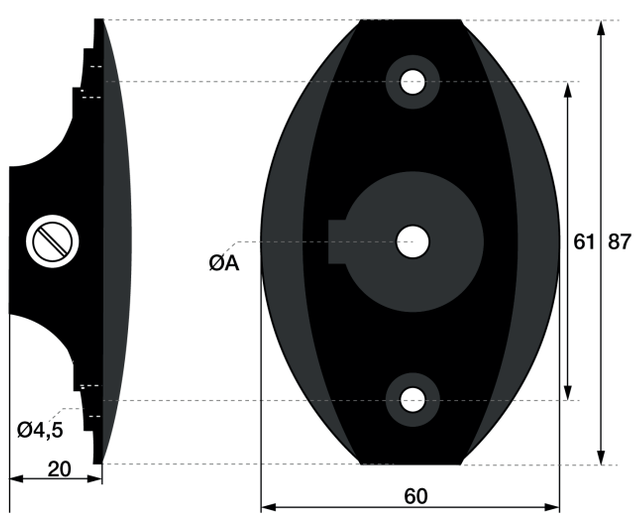

RL / KS / 27.10.2021

Matching accessories: Immersion sleeves

Brass immersion sleeve R1/2 "

Article no.	809520 10XX	Code	
Temp. max	+150 °C	05	50
Pressure proof up to	10 bar	10	100
Material	Nickel plated	15	150
Process connection	R1/2 "	20	200
Wrench size	22	25	250
Ø Inside / Outside (mm)	6,5 / 8	30	300
Scope of delivery	Immersion sleeve, packed in PE bag	40	400
Order code	809520 10	_ _	

Please attach the code for the mounting length.

Technical drawing

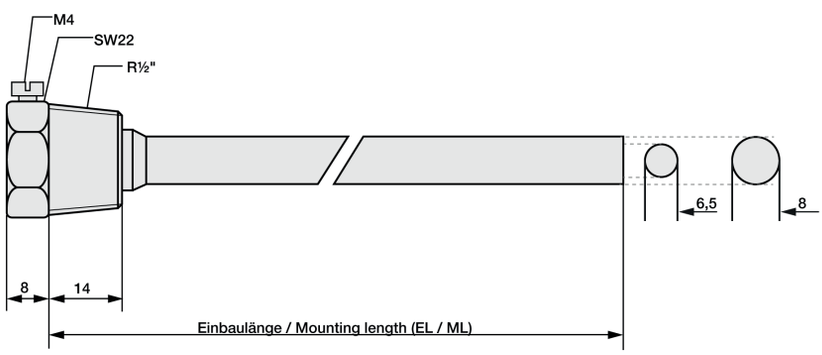

Stainless steel immersion sleeve G1/2 "

Article no.	809520 20XX	Code	
Temp. max	+600 °C	05	50
Pressure proof up to	40 bar	10	100
Material	Stainless steel 1.4571 | 316TI	15	150
Process connection	G1/2 "	20	200
Wrench size	22	25	250
Ø Inside / Outside (mm)	6,2 / 9	30	300
Scope of delivery	Immersion sleeve, packed in PE bag	40	300
Your order code	809520 20	_ _	

Please attach the code for the mounting length.

Technical drawing

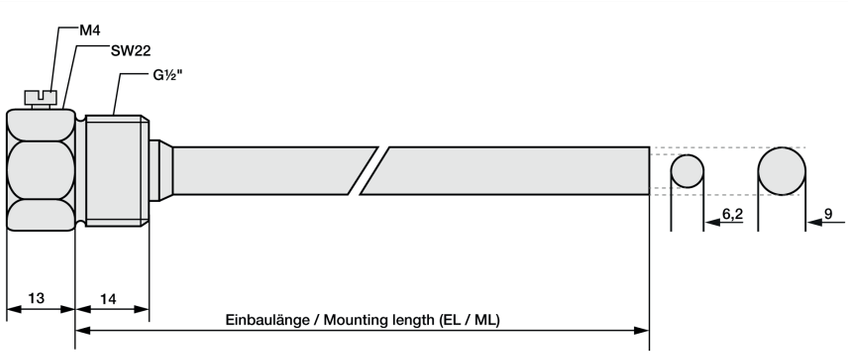

Would you like to contact us? Click **here**...

Matching accessories: Immersion sleeves

Immersion sleeve G1/2 " with cable gland

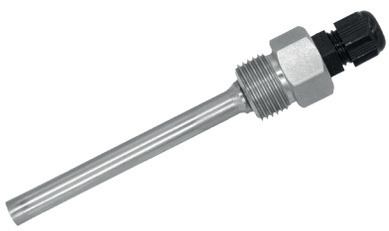

Article no.	**809520 60XX**	**Compression fitting**		**Code**	
Temp. max	+600 °C	Temp. max	100 °C	05	50
pressure proof until	40 bar	Material	Plastic	10	100
Material	Stainless steel 1.4571 | 316TI	Screw	M12 x 1,5	15	150
Process connection	G1/2 "	Clamping range (mm)	3 bis 6,5	20	200
Wrench size	22			25	250
Scope of delivery	Immersion sleeve, packed in PE bag	Cable gland	strain relief	30	300
				40	400
Your order code	809520 60			_ _	

Please attach the code for the mounting length.

Technical drawing

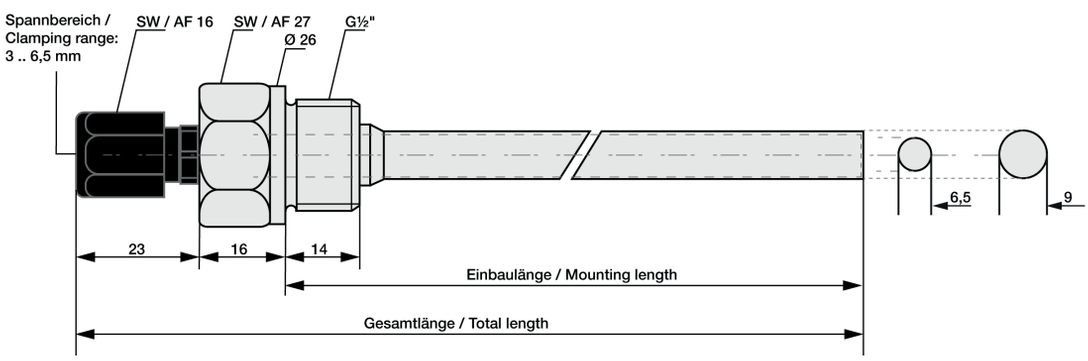

RL / KS / 27.10.2021

Matching accessories: Compression fittings

Compression fitting with PTFE clamping ring

Compression fittings with PTFE clamping ring can be used several times. They are only pressure-tight up to 10 bar. For assembly, please tighten the connecting nut of the compression fitting by hand as far as it will go (clearly noticeable) by hand. With a wrench suitable for the width across flats, please make a 1/4 turn for compression fittings with PTFE pressure ring.

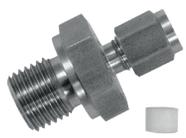

Article no.	809610 2XXX	Code	I - Ø Inside (mm)	Code	J - Process connection
Temp. max	+260 °C	0	1	27	M6x1[1]
Pressure proof up to	10 bar	1	1,5	28	M8x1[1]
Material	Stainless steel 1.4571 | 316TI	3	3	22	M10x1
Material clamping ring	PTFE	6	6	14	G1/8 "
Scope of delivery	Compression fitting, packed in PE bag			12	G1/4 "
				11	G1/2 "
Your order code	809610 2	_		_ _	

Append the code for Ø Inside & process connection to the article no. | [1] not available for Ø Inside (I) 6 mm

Dimensions for technical drawing

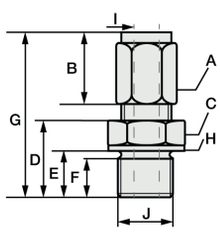

I	J	A	B	C	D	E	F	G	H
1	M6x1[1]	SW10	13	SW12	13	9	8	31	Ø10
1,5	M8x1[1]	SW10	13	SW12	13,5	9,5	8	31	Ø11,8
3	M10x1	Ø 1,5 & 3: SW10 | Ø 6: SW12	13	SW14	13,5	9,5	8	32	Ø13,8
6	G1/8 "	Ø 1,5 & 3: SW10 | Ø 6: SW12	13	SW14	13,5	9,5	8	32	Ø13,8
	G1/4 "	Ø 1,5 & 3: SW10 | Ø 6: SW12	13	SW19	20	14	12	38,5	Ø18
	G1/2 "	Ø 1,5 & 3: SW10 | Ø 6: SW12	13	SW27	23	17	14	38,5	Ø26

All dimensions in mm | [1] not available for Ø Inner (I) 6 mm

Compression fitting with stainless steel cutting ring

In compression fittings with stainless steel cutting ring, the compression fitting connects with the protective sleeve. This connection is pressure-resistant up to 40 bar. Therefore, these compression fittings can also only be used once and must be tightened more firmly. For assembly, please tighten the union nut of the compression fitting by hand as far as it will go (clearly noticeable). With a wrench suitable for the wrench size, please make 1 3/4 turns for compression fittings with stainless steel cutting ring.

Article no.	809610 1XXX	Code	I - Ø Inside (mm)	Code	J - Process connection
Temp. max	+800 °C	1	1,5	27	M6x1[1]
Pressure proof up to	40 bar	3	3	28	M8x1[1]
Material	Stainless steel 1.4571 | 316TI	6	6	22	M10x1
Material clamping ring	Stainless steel 1.4571 | 316TI			14	G1/8 "
Scope of delivery	Cutting ring screw fitting, packed in PE bag			12	G1/4 "
				11	G1/2 "
Your order code	809610 1	_		_ _	

Append the code for Ø Inside & process connection to the article no. | [1] not available for Ø Inside (I) 6 mm

Dimensions for technical drawing

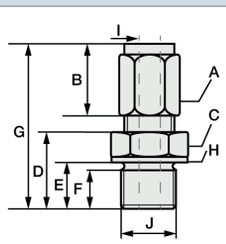

I	J	A	B	C	D	E	F	G	H
1,5	M6x1[1]	SW10	13	SW12	13	9	8	31	Ø10
3	M8x1[1]	SW10	13	SW12	13,5	9,5	8	31	Ø11,8
6	M10x1	Ø 1,5 & 3: SW10 | Ø 6: SW12	13	SW14	13,5	9,5	8	32	Ø13,8
	G1/8 "	Ø 1,5 & 3: SW10 | Ø 6: SW12	13	SW14	13,5	9,5	8	32	Ø13,8
	G1/4 "	Ø 1,5 & 3: SW10 | Ø 6: SW12	13	SW19	20	14	12	38,5	Ø18
	G1/2 "	Ø 1,5 & 3: SW10 | Ø 6: SW12	13	SW27	23	17	14	38,5	Ø26

All dimensions in mm | [1] not available for Ø Inner (I) 6 mm

RL / KS / 27.10.2021