USER INSTRUCTIONS

Programmable 2-wire Transmitter for Thermocouple APAQ C130TC

NFC CE 5 YEAR WARRANTY

The user instruction must be read prior to adjustment and/or installation.
All information subject to change without notice.

MEASURE OF SUCCESS

INOR Process AB, PO Box 9125, SE-200 39 Malmö, Sweden,
Phone: +46 40 312 560, Fax: +46 40 312 570, E-mail: support@inor.se

INOR Transmitter OY, Unikkotie 13, FI-01300 Vantaa, Finland,
Phone:+358 10 421 7900, Fax: +358 10 421 7901, E-mail: myynti@inor.fi

INOR Transmitter GmbH, Am See 24, D-47279 Duisburg, Germany,
Phone: +49-203 7382 762 0, Fax: +49-203 7382 762 2, E-mail: info@inor-gmbh.de

KROHNE Temperature Division INOR, 55 Cherry Hill Drive,
Beverly, MA 01915, United States
Phone: +1 978 826 6900, Fax: +1 978 535 1720, E-mail: inor-info@krohne.com

www.inor.com, www.inor.se

This product should not be mixed with other kind of scrap, after usage.
It should be handled as an electronic/electric device.

MEASURE OF SUCCESS

© INOR 10/2021 - 4008975501 - MA APAQ C130 TC R01 en

GENERAL INFORMATION

APAQ C130TC is a low cost, non-isolated, easy-to-use 2-wire transmitter, for thermocouple input, intended to be used in industrial environment.

The transmitter is configured from a mobile device via NFC communication, by using the app INOR Connect. Inor Connect is available for free download on App Store, Google Play Store and Huawei AppGallery.

DATA (short form)

Input	2-wire connection
TC type B - Pt30Rh-Pt6Rh (IEC 60584)	0...+1820 °C / +32...+3308 °F
TC type E - NiCr-CuNi (IEC 60584)	-270…+1000 °C / -454...+1832 °F
TC type J - Fe-CuNi (IEC 60584)	-210…+1200 °C / -346...+2192 °F
TC type K - NiCr-NiAl (IEC 60584)	-270…+1300 °C / -454...+2372 °F
TC type N - NiCrSi-NiSi (IEC 60584)	-270…+1300 °C / -454...+2372 °F
TC type R - Pt13Rh-Pt (IEC 60584)	-50...+1750 °C / -58...+3182 °F
TC type S - Pt10Rh-Pt (IEC 60584)	-50…+1750 °C / -58...+3182 °F
TC type T - Cu-CuNi (IEC 60584)	-270…+400 °C / -454...+752 °F
Input impedance	10 MΩ
Maximum wire loop resistance	In-head transmitter (TC sensor): 5 kΩ
Cold Junction Compensation	Internal or fixed
Output	4-20 mA, temperature linear
Sensor failure indication	Upscale (≥21.0 mA) or downscale (≤3.6 mA)
NAMUR Compliance	Current limitations and failure currents acc. to NAMUR NE 43
Adjustable filtering level	0.4 to 26 sec.
Warm-up time	After a max. 20 minutes the accuracy specifications are reached (due to the internal cold junction)
Ambient temperature	
Storage and operation	-40 to +85 °C / -40 to +185 °F
Galvanic isolation	None
Power supply	6 to 32 VDC
Accuracy	
TC type B	See Data Sheet
TC type R, S, T	Max. of ±2.0 °C or ±0.2% of span
	Max. of ±3.6 °F or ±0.2% of span
TC type E, J, K	Max. of ±1 °C or ±0.2% of span
	Max. of ±1.8 °F or ±0.2% of span
TC type N (-100...+1300 °C)	Max. of ±1 °C or ±0.2% of span
	Max. of ±1.8 °F or ±0.2% of span
TC type N (-270...-100 °C)	±2.0 °C / ±3.6 °F
CJC accuracy	Typical ±1 °C / ±1.8 °F (max ±3 °C / ±5.4 °F) within ambient temperature range
Mounting	DIN B-head or larger
Configuration	App INOR Connect via NFC™
RoHS, China RoHS	Directive: 2011/65/EU and 2015/863/EU Harmonized standard: EN IEC 63000 China RoHS 2
Factory settings	Type K
Input	0 to 1000 °C
Output	4 to 20 mA
Sensor error indication	Upscale

CONFIGURATION

Before making a configuration of APAQ C130TC you need to do following:
Make sure that you have a mobile device with NFC communication activated. Download the app INOR Connect to your mobile device.

Required versions:

iOS: iOS 13 or later and Iphone 7 or later for NFC

Android: Android 4.4 or later

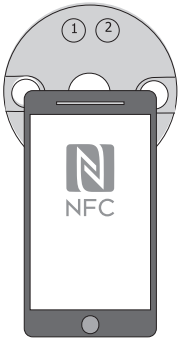

Configuration procedure:

1. Launch the app by clicking on the App icon or holding your mobile device against the transmitter on the part of the device where NFC is located (only possible with Android).
2. Click on "Read Configuration" and hold your mobile device against the transmitter as explained in the first section.
3. In the app you can edit the following:
   a. Sensor type
   b. Measuring range
   c. Upscale or downscale sensor error indication
   d. Filter level
   e. TAG-number
   f. Password

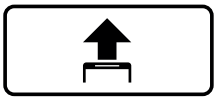

4. Once you have set the desired values in the app, you transfer it to the transmitter by clicking the transfer button and holding the mobile device against the transmitter until a green check box appears confirming that the transfer has been completed.

OUTPUT LOAD DIAGRAM

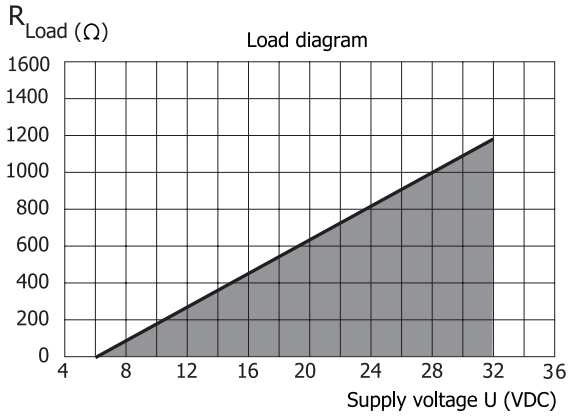

Maximum load depending on power supply Formula for the max. permissible output load for APAQ C130TC:

R_{Load} =(U-6)/0.022

DIMENSIONS

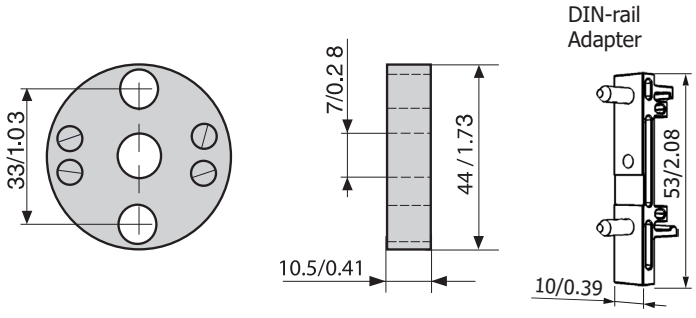

mm/inches

LIMITED WARRANTY

INOR Process AB, or any other affiliated company within the Inor Group (hereinafter jointly referred to as "Inor"), hereby warrants that the Product will be free from defects in materials or workmanship for a period of five (5) years from the date of delivery ("Limited Warranty"). This Limited Warranty is limited to repair or replacement at Inor's option and is effective only for the first end-user of the Product. Upon receipt of a warranty claim, Inor shall respond within a reasonable time period as to its decision concerning:

1 Whether Inor acknowledges its responsibility for any asserted defect in materials or workmanship; and, if so,
2 the appropriate cause of action to be taken (i.e. whether a defective product should be replaced or repaired by Inor).

This Limited Warranty applies only if the Product:

1 is installed according to the instructions furnished by Inor;
2 is connected to a proper power supply;
3 is not misused or abused; and
4 there is no evidence of tampering, mishandling, neglect, accidental damage, modification or repair without the approval of Inor or damage done to the Product by anyone other than Inor.

This Limited Warranty is provided by Inor and contains the only express warranty provided.

INOR SPECIFICALLY DISCLAIMS ANY EXPRESS WARRANTY NOT PROVIDED HEREIN AND ANY IMPLIED WARRANTY, GUARANTEE OR REPRESENTATION AS TO SUITABILITY FOR ANY PARTICULAR PURPOSE, PERFORMANCE, QUALITY AND ABSENCE OF ANY HIDDEN DEFECTS, AND ANY REMEDY FOR BREACH OF CONTRACT, WHICH BUT FOR THIS PROVISION, MIGHT ARISE BY IMPLICATION, OPERATION OF LAW, CUSTOM OF TRADE OR COURSE OF DEALING, INCLUDING IMPLIED WARRANTIES OF MER-CHANTABILITY AND FITNESS FOR A PARTICULAR PURPOSE. EXCEPT AS PROVIDED HEREIN, INOR FURTHER DISCLAIMS ANY RESPONSIBILITY FOR LOSSES, EXPENSES, INCONVENIENCES, SPECIAL, DIRECT, SECONDARY OR CONSEQUENTIAL DAMAGES ARISING FROM OWNERSHIP OR USE OF THE PRODUCT.

Products that are covered by the Limited Warranty will either be repaired or replaced at the option of Inor. Customer pays freight to Inor, and Inor will pay the return freight by post or other "normal" way of transport. If any other type of return freight is requested, customer pays the whole return cost.

INSTALLATION

APAQ C130TC is designed to fit inside connection heads type DIN B or larger. The larger center hole, diameter 7 mm/0.28 inch, facilitates the pulling through of the sensor leads or an insert tube, greatly simplifying the mounting procedure.

⚠ Connect input, output and power supply acc. to "CONNECTIONS". A convinient way to install the transmitter is to use the INOR mounting kits for in-head and DIN rail mounting. In order to minimize measuring errors make sure the connecting screws are tightened enough, 0.5-0.6 Nm.

MOUNTING

How to mount on DIN-rail Adapter

Head mounting kit

Step 1

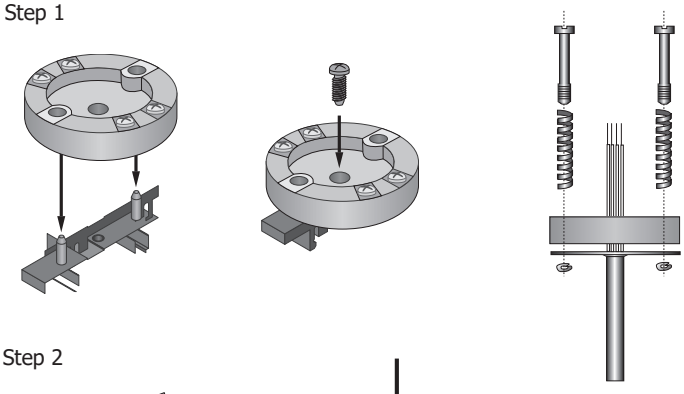

Step 2

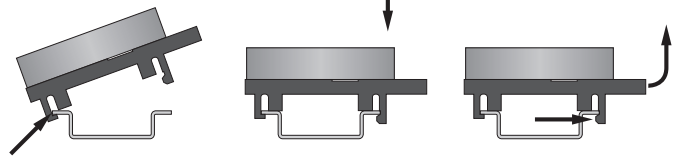

CONNECTIONS

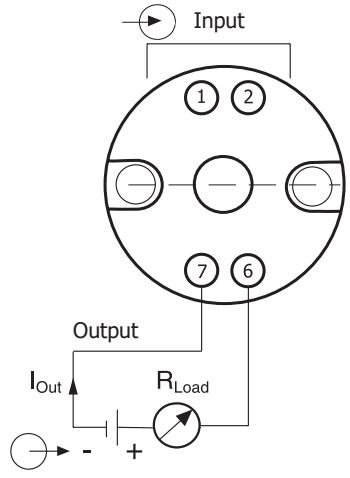

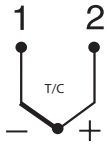

TC Connection

ORDERING INFORMATION

APAQ C130TC	70C1300211
Head mounting kit	70ADA00017
DIN-rail Adapter + Screw (10 pcs)	70ADA00027

The transmitters are delivered with either a default factory setting or configured according to customer's specification.